J & E Supply & Fastener Co., Inc.
jandesupply.com

1903 SE 59th St · Oklahoma City, Oklahoma 73129 · 405-670-1234
1001 S 12th St · Duncan, Oklahoma 73533 · 580-255-2582

TECH DATA

1/4″-20 × 1″ Carriage Bolt

Steel · Zinc-plated

THE PART

Part number	0CB0250C01000Z
Type	Carriage bolt, square neck
Size	1/4″-20 × 1″
Thread	20 per inch, coarse (UNC)
Length	1″ (under the head to the tip)
Grade	Not stated on this part
Material	Steel
Finish	Zinc-plated
Thread length	3/4″ minimum

SIDE VIEW

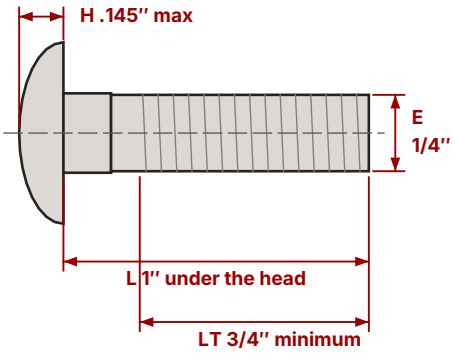

HEAD

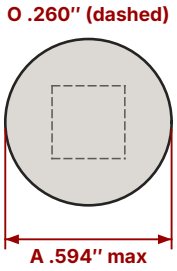

Head and neck: ASME B18.5, maximum. Not for gauging.

THREAD

20 threads per inch

Coarse (UNC)
Major diameter 0.250″
Tap drill #7 (0.2010″)

SQUARE NECK

.245-.260″

Across the flats (O)
Depth .125-.156″ (P)

GRADE

Not stated

This listing doesn't give a grade, so no strength is printed - give us a call at 405-670-1234.

DIMENSIONS · ASME B18.5

A Head diameter	.594 / .563
H Head height	.145 / .125
O Square width	.260 / .245
P Square depth	.156 / .125
L Length, under the head	1″
LT Thread length	3/4″ minimum
Stress area, UNC	0.0318 sq in

Max / min in inches. A dash: our sources differ - give us a call at 405-670-1234.

STRENGTH

No grade is given for this part, so no strength is printed. If the job needs a rated bolt, give us a call at 405-670-1234.

Information only, summarized from the published standards and makers' data on our reference pages at jandesupply.com (11/22/2026). Standard values, not a test of this lot — the current edition of the governing standard governs. J & E Supply makes no warranty of suitability for any use; for critical work, confirm against the standard and the maker's certifications and test your application. J & E Supply is an independent distributor.

J & E Supply & Fastener Co., Inc.
jandesupply.com

1903 SE 59th St · Oklahoma City, Oklahoma 73129 · 405-670-1234
1001 S 12th St · Duncan, Oklahoma 73533 · 580-255-2582

TECH DATA

1/4″-20 × 1″ Carriage Bolt

Steel · Zinc-plated

HOW TO MEASURE

Measure from under the head to the tip. The head sits on top of the surface, so it isn’t part of the length. Diameter is across the shank; thread is the number of threads in one inch.

CARRIAGE BOLT CHART

Scan for every size: head, square neck, thread length.

jandesupply.com · Resources

USE IT WITH

1/4″-20 hex nut

The square neck keeps the bolt from turning while you tighten the nut.

Information only, summarized from the published standards and makers' data on our reference pages at jandesupply.com (11/22/2026). Standard values, not a test of this lot — the current edition of the governing standard governs. J & E Supply makes no warranty of suitability for any use; for critical work, confirm against the standard and the maker's certifications and test your application. J & E Supply is an independent distributor.