**J & E Supply & Fastener Co., Inc.**
jandesupply.com

1903 SE 59th St · Oklahoma City, Oklahoma 73129 · 405-670-1234
1001 S 12th St · Duncan, Oklahoma 73533 · 580-255-2582

# TECH DATA

## 5/16″-18 × 1″ Carriage Bolt

Grade 5 · Steel · Plain

### THE PART

| | |
|---|---|
| Part number | 0CB0312C01000P5 |
| Type | Carriage bolt, square neck |
| Size | 5/16″-18 × 1″ |
| Thread | 18 per inch, coarse (UNC) |
| Length | 1″ (under the head to the tip) |
| Grade | Grade 5 (SAE J429) |
| Material | Steel |
| Finish | Plain |
| Thread length | 7/8″ minimum |

SIDE VIEW

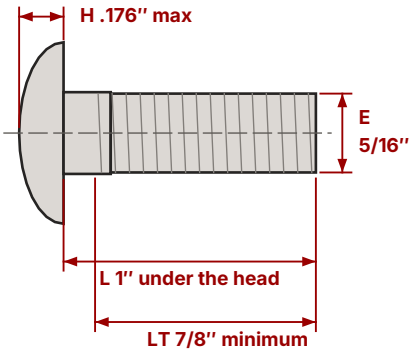


HEAD

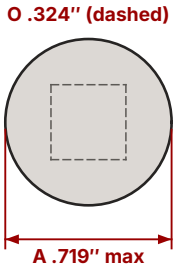


Head and neck: ASME B18.5, maximum. Not for gauging.

### THREAD

**18 threads per inch**

Coarse (UNC)
Major diameter 0.3125″
Tap drill F (0.2570″)

### SQUARE NECK

**.307-.324″**

Across the flats (O)
Depth .156-.187″ (P)

### GRADE 5 HEAD MARK



Three radial lines

Plus the maker's mark.

### DIMENSIONS · ASME B18.5

| | |
|---|---|
| A Head diameter | .719 / .688 |
| H Head height | .176 / .156 |
| O Square width | .324 / .307 |
| P Square depth | .187 / .156 |
| L Length, under the head | 1″ |
| LT Thread length | 7/8″ minimum |
| Stress area, UNC | 0.0524 sq in |

Max / min in inches. A dash: our sources differ - give us a call at 405-670-1234.

### STRENGTH · SAE J429 GRADE 5, THIS SIZE

**Proof load** — 4,450 lb
holds without stretching for good

**Yield** — 4,800 lb
starts to stretch for good

**Tensile** — 6,300 lb
breaks at no less than this

| | |
|---|---|
| Proof / yield / tensile | 85 / 92 / 120 ksi min. |
| Core hardness | Rockwell C25–C34 |

Loads = stress area × strength, minimums, to the nearest 50 lb.

Information only, summarized from the published standards and makers' data on our reference pages at jandesupply.com (11/25/2026). Standard values, not a test of this lot — the current edition of the governing standard governs. J & E Supply makes no warranty of suitability for any use; for critical work, confirm against the standard and the maker's certifications and test your application. J & E Supply is an independent distributor.

J & E Supply & Fastener Co., Inc.
jandesupply.com

1903 SE 59th St · Oklahoma City, Oklahoma 73129 · 405-670-1234
1001 S 12th St · Duncan, Oklahoma 73533 · 580-255-2582

# TECH DATA

## 5/16″-18 × 1″ Carriage Bolt

Grade 5 · Steel · Plain

**HOW TO MEASURE**

Measure from under the head to the tip. The head sits on top of the surface, so it isn't part of the length. Diameter is across the shank; thread is the number of threads in one inch.

**CARRIAGE BOLT CHART**

Scan for every size: head, square neck, thread length.

jandesupply.com · Resources

**USE IT WITH**

### 5/16″-18 SAE Grade 5 hex nut, or ASTM A563 Grade A

The common shop pairing for Grade 5 bolts. The nut must be at least as strong as the bolt.

Information only, summarized from the published standards and makers' data on our reference pages at jandesupply.com (11/25/2026). Standard values, not a test of this lot — the current edition of the governing standard governs. J & E Supply makes no warranty of suitability for any use; for critical work, confirm against the standard and the maker's certifications and test your application. J & E Supply is an independent distributor.