J & E Supply & Fastener Co., Inc.
jandesupply.com

1903 SE 59th St · Oklahoma City, Oklahoma 73129 · 405-670-1234
1001 S 12th St · Duncan, Oklahoma 73533 · 580-255-2582

TECH DATA

3/8″-16 × 4-1/2″ Carriage Bolt

Grade 5 · Steel · Plain

THE PART

Part number	0CB0375C04500P5
Type	Carriage bolt, square neck
Size	3/8″-16 × 4-1/2″
Thread	16 per inch, coarse (UNC)
Length	4-1/2″ (under the head to the tip)
Grade	Grade 5 (SAE J429)
Material	Steel
Finish	Plain
Thread length	1″ minimum

SIDE VIEW

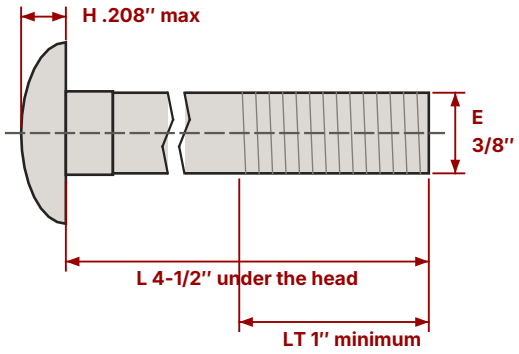

HEAD

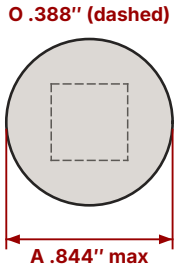

Shank shown broken to fit. Head and neck: ASME B18.5, maximum. Not for gauging.

THREAD

16 threads per inch

Coarse (UNC)
Major diameter 0.375″
Tap drill 5/16″ (0.3125″)

SQUARE NECK

.368-.388″

Across the flats (O)
Depth .188-.219″ (P)

GRADE 5 HEAD MARK



Three radial lines

Plus the maker's mark.

DIMENSIONS · ASME B18.5

A Head diameter	.844 / .782
H Head height	.208 / .188
O Square width	.388 / .368
P Square depth	.219 / .188
L Length, under the head	4-1/2″
LT Thread length	1″ minimum
Stress area, UNC	0.0775 sq in

Max / min in inches. A dash: our sources differ - give us a call at 405-670-1234.

STRENGTH · SAE J429 GRADE 5, THIS SIZE

Proof load — 6,600 lb
holds without stretching for good

Yield — 7,150 lb
starts to stretch for good

Tensile — 9,300 lb
breaks at no less than this

Proof / yield / tensile	85 / 92 / 120 ksi min.
Core hardness	Rockwell C25–C34

Loads = stress area × strength, minimums, to the nearest 50 lb.

Information only, summarized from the published standards and makers' data on our reference pages at jandesupply.com (11/22/2026). Standard values, not a test of this lot — the current edition of the governing standard governs. J & E Supply makes no warranty of suitability for any use; for critical work, confirm against the standard and the maker's certifications and test your application. J & E Supply is an independent distributor.

J & E Supply & Fastener Co., Inc.
jandesupply.com

1903 SE 59th St · Oklahoma City, Oklahoma 73129 · 405-670-1234
1001 S 12th St · Duncan, Oklahoma 73533 · 580-255-2582

TECH DATA

3/8″-16 × 4-1/2″ Carriage Bolt

Grade 5 · Steel · Plain

HOW TO MEASURE

Measure from under the head to the tip. The head sits on top of the surface, so it isn't part of the length. Diameter is across the shank; thread is the number of threads in one inch.

CARRIAGE BOLT CHART

Scan for every size: head, square neck, thread length.

jandesupply.com · Resources

USE IT WITH

3/8″-16 SAE Grade 5 hex nut, or ASTM A563 Grade A

The common shop pairing for Grade 5 bolts. The nut must be at least as strong as the bolt.

Information only, summarized from the published standards and makers' data on our reference pages at jandesupply.com (11/22/2026). Standard values, not a test of this lot — the current edition of the governing standard governs. J & E Supply makes no warranty of suitability for any use; for critical work, confirm against the standard and the maker's certifications and test your application. J & E Supply is an independent distributor.