J & E Supply & Fastener Co., Inc.
jandesupply.com

1903 SE 59th St · Oklahoma City, Oklahoma 73129 · 405-670-1234
1001 S 12th St · Duncan, Oklahoma 73533 · 580-255-2582

TECH DATA

M4×0.7 × 8mm Flat Head Machine Screw

Steel · Zinc-plated · DIN 963

THE PART

Part number	**MMS004C008FHSLZ**
Type	**Slotted flat head, DIN 963**
Thread	**M4 × 0.7 (coarse)**
Length	**8 mm overall**
Driver	**Slotted (flat blade)**
Material	**Steel**
Finish	**Zinc-plated**

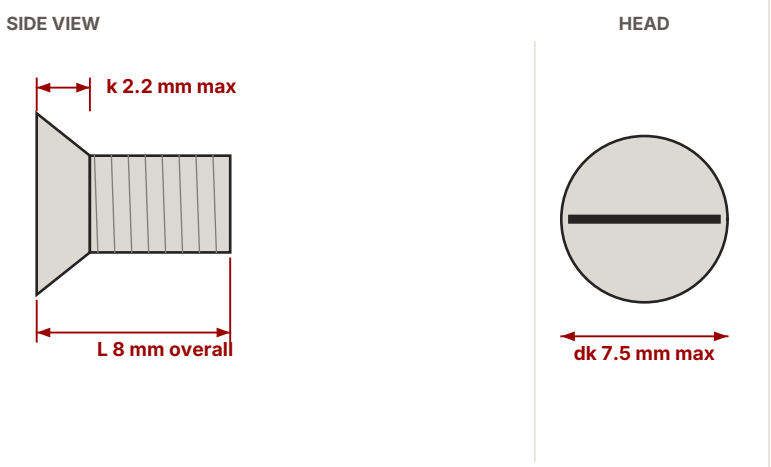

Head: DIN 963, maximum. Thread drawn full length. Not for gauging.

DRIVER

Slotted

Flat blade; slot 1 mm wide

HEAD

7.5 mm

Diameter (dk), maximum

Height 2.2 mm max (k), 90° countersink

THREAD

M4 × 0.7

Coarse pitch, 0.7 mm

DIMENSIONS · DIN 963

dk Head diameter (max)	**7.5 mm**
k Head height (max)	**2.2 mm**
n Slot width	**1 mm**
L Length	**8 mm overall**

Millimetres, maximum. A dash on the chart: our sources differ - give us a call at 405-670-1234.

GOOD TO KNOW

A flat head sits flush in a 90° countersink, so it is measured overall - head included.

Information only, summarized from the published standards and makers' data on our reference pages at jandesupply.com (11/23/2026). Standard values, not a test of this lot — the current edition of the governing standard governs. J & E Supply makes no warranty of suitability for any use; for critical work, confirm against the standard and the maker's certifications and test your application. J & E Supply is an independent distributor.

J & E Supply & Fastener Co., Inc.
jandesupply.com

1903 SE 59th St · Oklahoma City, Oklahoma 73129 · 405-670-1234
1001 S 12th St · Duncan, Oklahoma 73533 · 580-255-2582

TECH DATA

M4×0.7 × 8mm Flat Head Machine Screw

Steel · Zinc-plated · DIN 963

HOW TO MEASURE

Measure the overall length — from the top of the head to the tip. The head sinks flush into the material, so it’s part of the length. M4 is the thread diameter, 0.7 mm the pitch.

METRIC MACHINE SCREW CHART

Scan for every size: head and driver.

jandesupply.com · Resources

USE IT WITH

An M4 × 0.7 nut or tapped hole

And a 90° countersink so the head sits flush.

Information only, summarized from the published standards and makers' data on our reference pages at jandesupply.com (11/23/2026). Standard values, not a test of this lot — the current edition of the governing standard governs. J & E Supply makes no warranty of suitability for any use; for critical work, confirm against the standard and the maker's certifications and test your application. J & E Supply is an independent distributor.