J & E Supply & Fastener Co., Inc.
jandesupply.com

1903 SE 59th St · Oklahoma City, Oklahoma 73129 · 405-670-1234
1001 S 12th St · Duncan, Oklahoma 73533 · 580-255-2582

TECH DATA

M6×1 × 30mm Oval Head Machine Screw

Steel · Zinc-plated · DIN 966

THE PART

Part number	**MMS006C030OHPHZ**
Type	**Phillips oval head, DIN 966**
Thread	**M6 × 1 (coarse)**
Length	**30 mm from the rim**
Driver	**PH3 Phillips**
Material	**Steel**
Finish	**Zinc-plated**

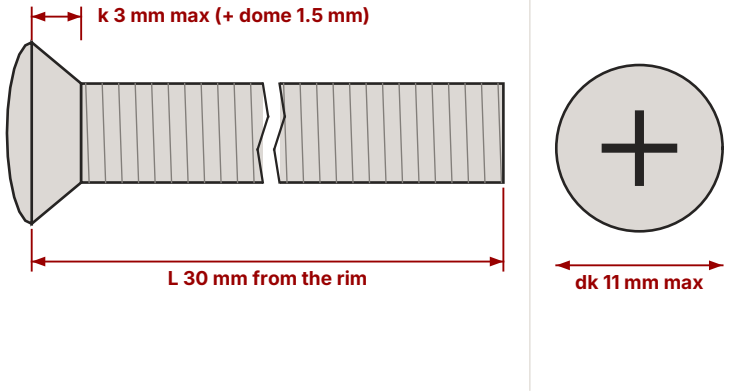

Shank shown broken to fit. Head: DIN 966, maximum. Thread drawn full length. Not for gauging.

DRIVER

PH3 Phillips

Driver / bit size

HEAD

11 mm

Diameter (dk), maximum
Height 3 mm max (k), 90° countersink, dome 1.5 mm approx.

THREAD

M6 × 1

Coarse pitch, 1 mm

DIMENSIONS · DIN 966

dk Head diameter (max)	**11 mm**
k Countersink height (max)	**3 mm**
f Dome (approx.)	**1.5 mm**
Phillips size	**PH3**
L Length	**30 mm from the rim**

Millimetres, maximum. A dash on the chart: our sources differ - give us a call at 405-670-1234.

GOOD TO KNOW

An oval head sits in a 90° countersink with its dome above the surface. Length is measured from the rim, so the dome is not counted.

Information only, summarized from the published standards and makers' data on our reference pages at jandesupply.com (11/25/2026). Standard values, not a test of this lot — the current edition of the governing standard governs. J & E Supply makes no warranty of suitability for any use; for critical work, confirm against the standard and the maker's certifications and test your application. J & E Supply is an independent distributor.

1903 SE 59th St · Oklahoma City, Oklahoma 73129 · 405-670-1234
1001 S 12th St · Duncan, Oklahoma 73533 · 580-255-2582

TECH DATA

M6×1 × 30mm Oval Head Machine Screw

Steel · Zinc-plated · DIN 966

HOW TO MEASURE

An oval (raised countersunk) head’s dome stays above the surface, so it’s not counted. Measure from the rim — where the dome meets the cone — to the tip. M6 is the thread diameter, 1 mm the pitch.

METRIC MACHINE SCREW CHART

Scan for every size: head and driver.

jandesupply.com · Resources

USE IT WITH

An M6 × 1 nut or tapped hole and a PH3 bit

And a 90° countersink.

Information only, summarized from the published standards and makers' data on our reference pages at jandesupply.com (11/25/2026). Standard values, not a test of this lot — the current edition of the governing standard governs. J & E Supply makes no warranty of suitability for any use; for critical work, confirm against the standard and the maker's certifications and test your application. J & E Supply is an independent distributor.