J & E Supply & Fastener Co., Inc.
jandesupply.com

1903 SE 59th St · Oklahoma City, Oklahoma 73129 · 405-670-1234
1001 S 12th St · Duncan, Oklahoma 73533 · 580-255-2582

TECH DATA

M8×1.25 × 40mm Pan Head Machine Screw

Stainless A2 (18-8) · DIN 7985

THE PART

Part number	**MMS008C040PNPHSS**
Type	**Phillips pan head, DIN 7985**
Thread	**M8 × 1.25 (coarse)**
Length	**40 mm under the head**
Driver	**PH4 Phillips**
Material	**Stainless A2 (18-8)**

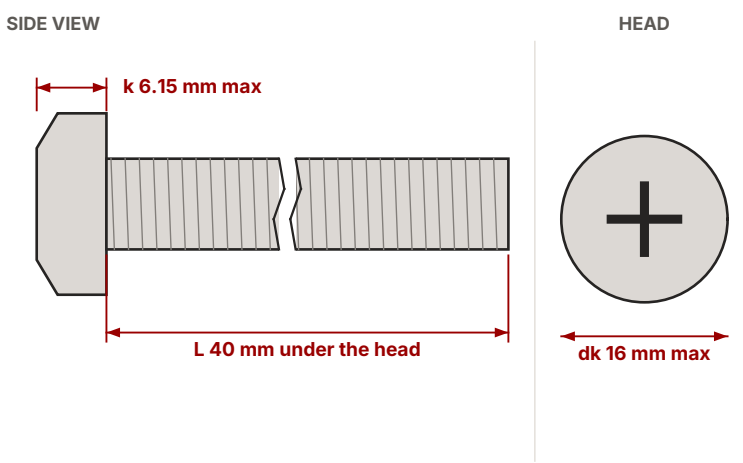

Shank shown broken to fit. Head: DIN 7985, maximum. Thread drawn full length. Not for gauging.

DRIVER

PH4 Phillips

Driver / bit size

HEAD

16 mm

Diameter (dk), maximum
Height 6.15 mm max (k)

THREAD

M8 × 1.25

Coarse pitch, 1.25 mm

DIMENSIONS · DIN 7985

dk Head diameter (max)	**16 mm**
k Head height (max)	**6.15 mm**
Phillips size	**PH4**
L Length	**40 mm under the head**

Millimetres, maximum. A dash on the chart: our sources differ - give us a call at 405-670-1234.

GOOD TO KNOW

The head sits on top of the work, so length is measured from under the head.

Information only, summarized from the published standards and makers' data on our reference pages at jandesupply.com (11/23/2026). Standard values, not a test of this lot — the current edition of the governing standard governs. J & E Supply makes no warranty of suitability for any use; for critical work, confirm against the standard and the maker's certifications and test your application. J & E Supply is an independent distributor.

1903 SE 59th St · Oklahoma City, Oklahoma 73129 · 405-670-1234
1001 S 12th St · Duncan, Oklahoma 73533 · 580-255-2582

TECH DATA

M8×1.25 × 40mm Pan Head Machine Screw

Stainless A2 (18-8) · DIN 7985

HOW TO MEASURE

Measure from under the head to the tip. The head sits on top of the surface, so it isn't part of the length. M8 is the thread diameter, 1.25 mm the pitch.

METRIC MACHINE SCREW CHART

Scan for every size: head and driver.

jandesupply.com · Resources

USE IT WITH

An M8 × 1.25 nut or tapped hole and a PH4 bit

The head sits on top of the work.

Information only, summarized from the published standards and makers' data on our reference pages at jandesupply.com (11/23/2026). Standard values, not a test of this lot — the current edition of the governing standard governs. J & E Supply makes no warranty of suitability for any use; for critical work, confirm against the standard and the maker's certifications and test your application. J & E Supply is an independent distributor.