J & E Supply & Fastener Co., Inc.
jandesupply.com

1903 SE 59th St · Oklahoma City, Oklahoma 73129 · 405-670-1234
1001 S 12th St · Duncan, Oklahoma 73533 · 580-255-2582

TECH DATA

M16 × 2 Nylon-Insert Lock Nut

Steel · Zinc-plated · DIN 985

THE PART

Part number	**MNY016CZ**
Type	**Nylon-insert lock nut, DIN 985**
Thread	**M16 × 2 (coarse)**
Wrench	**24 mm across flats**
Height	**16 mm max**
Material	**Steel**
Finish	**Zinc-plated**

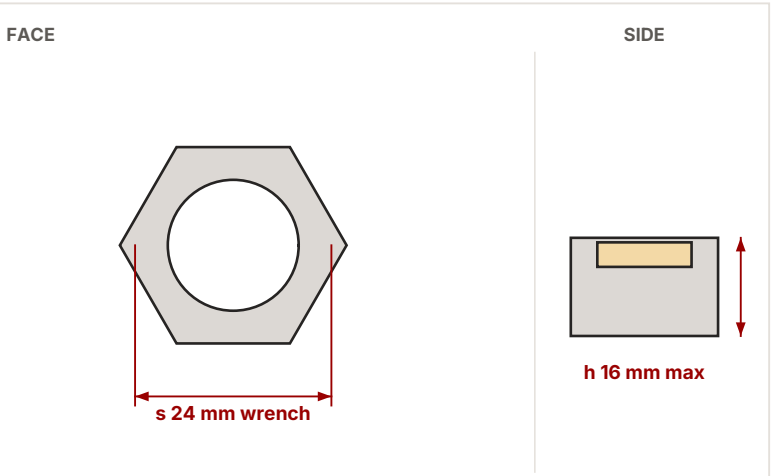

DIN 985, maximum sizes. Not to scale between views. Not for gauging.

WRENCH / SOCKET

24 mm

Across the flats (s)

HEIGHT

16 mm max

Overall, with the nylon ring

THREAD

M16 × 2

Coarse pitch, 2 mm

Fits an M16 bolt of the same pitch

DIMENSIONS · DIN 985

s Across flats	**24 mm**
h Height, max	**16 mm**

Overall height with the nylon ring.

GOOD TO KNOW

Match the nut to the bolt: a nut at least as strong as the bolt, and the same thread pitch.

METRIC NUT CHART

Scan for every size: wrench and height.

jandesupply.com · Resources

USE IT WITH

An M16 × 2 bolt and a 24 mm wrench

The nut must be at least as strong as the bolt.

Information only, summarized from the published standards and makers' data on our reference pages at jandesupply.com (11/24/2026). Standard values, not a test of this lot — the current edition of the governing standard governs. J & E Supply makes no warranty of suitability for any use; for critical work, confirm against the standard and the maker's certifications and test your application. J & E Supply is an independent distributor.