J & E Supply & Fastener Co., Inc.
jandesupply.com

1903 SE 59th St · Oklahoma City, Oklahoma 73129 · 405-670-1234
1001 S 12th St · Duncan, Oklahoma 73533 · 580-255-2582

TECH DATA

M8×1 × 1 m All-Thread Rod

ASTM A193 B7 · Steel · Plain

THE PART

Part number	**MRD008M7P**
Type	**Metric all-thread rod**
Size	**M8 × 1 × 1 m**
Thread	**Fine, 1 mm pitch**
Length	**1 m (1,000 mm), end to end**
Grade	**ASTM A193 B7**
Material	**Steel**
Finish	**Plain**

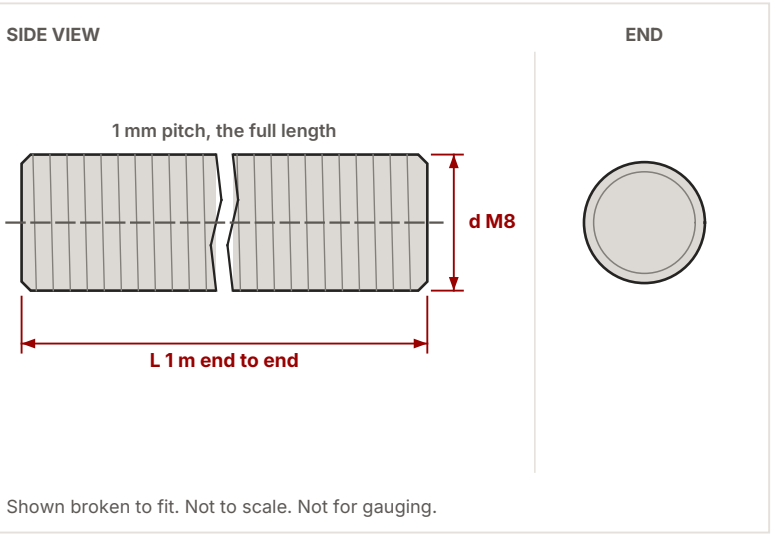

Shown broken to fit. Not to scale. Not for gauging.

THREAD

1 mm pitch

Fine thread, M8 × 1
Threaded end to end

NUT WRENCH

13 mm

Hex nut (DIN 934), across the flats.

GRADE

B7

Steel, plain.

DIMENSIONS

d Thread	**M8 × 1 (fine)**
L Length, end to end	**1 m (1,000 mm)**
Stress area	**39.2 mm²**

Stress area from our metric hex cap dimensions chart (ISO 898-1 formula, this size and pitch).

STRENGTH · B7, THIS SIZE

Yield — **28.4 kN**
starts to stretch for good

Tensile — **33.8 kN**
breaks at no less than this

Yield / tensile	**105 / 125 ksi min.**

Loads = stress area × strength, minimums, from our ASTM A193 B7 page. ksi × 6.895 = MPa. 1 kN = 1,000 N.

Information only, summarized from the published standards and makers' data on our reference pages at jandesupply.com (11/24/2026). Standard values, not a test of this lot — the current edition of the governing standard governs. J & E Supply makes no warranty of suitability for any use; for critical work, confirm against the standard and the maker's certifications and test your application. J & E Supply is an independent distributor.

J & E Supply & Fastener Co., Inc.
jandesupply.com

1903 SE 59th St · Oklahoma City, Oklahoma 73129 · 405-670-1234
1001 S 12th St · Duncan, Oklahoma 73533 · 580-255-2582

TECH DATA

M8×1 × 1 m All-Thread Rod

ASTM A193 B7 · Steel · Plain

HOW TO MEASURE

Continuous (all-thread): threaded the full length. Just give us the overall length and the size. Diameter in millimeters; the pitch is the distance between threads.

METRIC THREAD CHART

Scan for every metric size and pitch, with tap drills.

jandesupply.com · Resources

USE IT WITH

An M8 × 1 nut

A nut of the same thread and at least the rod's strength. Bring it or its grade to either store and we'll match it. Metric and inch don't mix.

Information only, summarized from the published standards and makers' data on our reference pages at jandesupply.com (11/24/2026). Standard values, not a test of this lot — the current edition of the governing standard governs. J & E Supply makes no warranty of suitability for any use; for critical work, confirm against the standard and the maker's certifications and test your application. J & E Supply is an independent distributor.