J & E Supply & Fastener Co., Inc.
jandesupply.com

1903 SE 59th St · Oklahoma City, Oklahoma 73129 · 405-670-1234
1001 S 12th St · Duncan, Oklahoma 73533 · 580-255-2582

TECH DATA

M27×3 × 1 m All-Thread Rod

Property class 10.9 (ISO 898-1) · Steel · Plain

THE PART

Part number	**MRD027C10P**
Type	**Metric all-thread rod**
Size	**M27 × 3 × 1 m**
Thread	**Coarse, 3 mm pitch**
Length	**1 m (1,000 mm), end to end**
Grade	**Property class 10.9 (ISO 898-1)**
Material	**Steel**
Finish	**Plain**

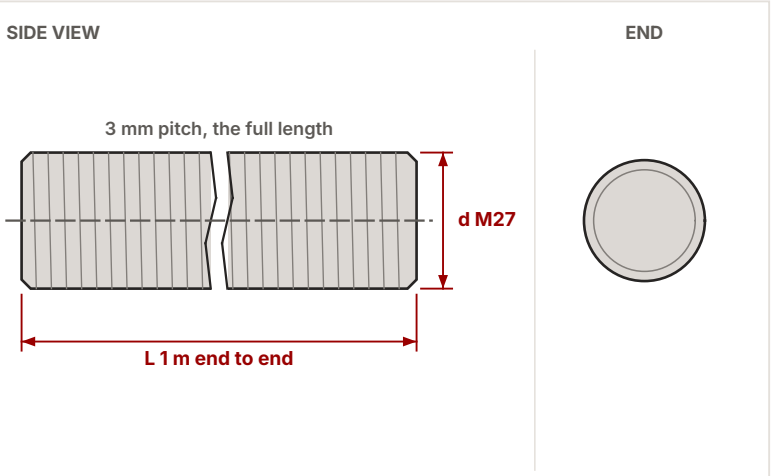

Shown broken to fit. Not to scale. Not for gauging.

THREAD

3 mm pitch

Coarse thread, M27 × 3
Threaded end to end

NUT WRENCH

41 mm

Hex nut (DIN 934), across the flats.

GRADE

Class 10.9

Property class, ISO 898-1.
Steel, plain.

DIMENSIONS

d Thread	**M27 × 3 (coarse)**
L Length, end to end	**1 m (1,000 mm)**
Stress area	**459.4 mm²**

Stress area from our metric hex cap dimensions chart (ISO 898-1 formula, this size and pitch).

STRENGTH · CLASS 10.9, THIS SIZE

Proof load — **381.3 kN**
holds without stretching for good

Yield — **431.8 kN**
starts to stretch for good

Tensile — **477.8 kN**
breaks at no less than this

Proof / yield / tensile	**830 / 940 / 1,040 MPa min.**

Loads = stress area × strength, minimums, from ISO 898-1. 1 kN = 1,000 N.

Information only, summarized from the published standards and makers' data on our reference pages at jandesupply.com (11/25/2026). Standard values, not a test of this lot — the current edition of the governing standard governs. J & E Supply makes no warranty of suitability for any use; for critical work, confirm against the standard and the maker's certifications and test your application. J & E Supply is an independent distributor.

J & E Supply & Fastener Co., Inc.
jandesupply.com

1903 SE 59th St · Oklahoma City, Oklahoma 73129 · 405-670-1234
1001 S 12th St · Duncan, Oklahoma 73533 · 580-255-2582

TECH DATA

M27×3 × 1 m All-Thread Rod

Property class 10.9 (ISO 898-1) · Steel · Plain

HOW TO MEASURE

Continuous (all-thread): threaded the full length. Just give us the overall length and the size. Diameter in millimeters; the pitch is the distance between threads.

METRIC THREAD CHART

Scan for every metric size and pitch, with tap drills.

jandesupply.com · Resources

USE IT WITH

An M27 × 3 nut, class 10

A class 10 nut on a 10.9 rod (from our ISO 898-1 page). A weaker nut can strip before the rod reaches its strength. Metric and inch don't mix.

Information only, summarized from the published standards and makers' data on our reference pages at jandesupply.com (11/25/2026). Standard values, not a test of this lot — the current edition of the governing standard governs. J & E Supply makes no warranty of suitability for any use; for critical work, confirm against the standard and the maker's certifications and test your application. J & E Supply is an independent distributor.