J & E Supply & Fastener Co., Inc.
jandesupply.com

1903 SE 59th St · Oklahoma City, Oklahoma 73129 · 405-670-1234
1001 S 12th St · Duncan, Oklahoma 73533 · 580-255-2582

TECH DATA

M3×0.5 × 50mm Socket Head Cap

Class 12.9 · Steel · Plain · DIN 912

THE PART

Part number	**MSC003C050CSPT8P**
Type	**Socket head cap screw, DIN 912**
Thread	**M3 × 0.5 (coarse)**
Length	**50 mm (under the head)**
Hex key	**2.5 mm**
Class	**Property class 12.9 (ISO 898-1)**
Material	**Steel**
Finish	**Plain**
Thread length	**18 mm (ref)**

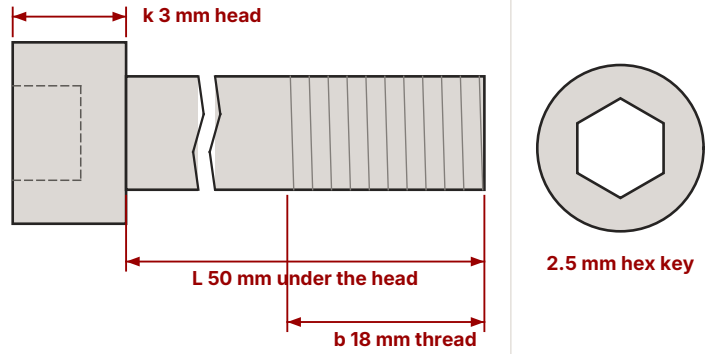

Shank shown broken to fit. Head diameter drawn in typical proportion (not on our chart). Not for gauging.

HEX KEY (ALLEN)

2.5 mm

Metric key

THREAD

M3 × 0.5

Coarse pitch, 0.5 mm

CLASS

12.9

Property class, ISO 898-1, marked on the head

DIMENSIONS · DIN 912 / ISO 4762

s Hex key	**2.5 mm**
k Head height, max	**3 mm**
b Thread length (ref)	**18 mm**
L Length	**50 mm**
Stress area	**5.0 mm²**

STRENGTH · CLASS 12.9, THIS SIZE

Proof load — **4.9 kN**
holds without stretching for good

Yield — **5.5 kN**
starts to stretch for good

Tensile — **6.1 kN**
breaks at no less than this

Proof / yield / tensile	**970 / 1,100 / 1,220 MPa min.**
Hardness	**HRC 39–44**

Loads = stress area × strength, minimums (ISO 898-1). 1 kN = 1,000 N.

Information only, summarized from the published standards and makers' data on our reference pages at jandesupply.com (11/25/2026). Standard values, not a test of this lot — the current edition of the governing standard governs. J & E Supply makes no warranty of suitability for any use; for critical work, confirm against the standard and the maker's certifications and test your application. J & E Supply is an independent distributor.

J & E Supply & Fastener Co., Inc.
jandesupply.com

1903 SE 59th St · Oklahoma City, Oklahoma 73129 · 405-670-1234
1001 S 12th St · Duncan, Oklahoma 73533 · 580-255-2582

TECH DATA

M3×0.5 × 50mm Socket Head Cap

Class 12.9 · Steel · Plain · DIN 912

HOW TO MEASURE

Measure from under the head to the tip. The head sits on top of the surface, so it isn't part of the length. Metric screws are measured in millimetres; M3 is the thread diameter, 0.5 mm the pitch.

METRIC SOCKET HEAD CHART

Scan for every size: hex key, head, thread.

jandesupply.com · Resources

USE IT WITH

A 2.5 mm hex key and an M3 × 0.5 nut, class 12

A class 12 nut on a 12.9 screw (ISO 898-2, from our ISO 898-1 page).

Information only, summarized from the published standards and makers' data on our reference pages at jandesupply.com (11/25/2026). Standard values, not a test of this lot — the current edition of the governing standard governs. J & E Supply makes no warranty of suitability for any use; for critical work, confirm against the standard and the maker's certifications and test your application. J & E Supply is an independent distributor.